COPPERFIT INDUSTRIES

www.copperfit.com

IPS Ball Valve

Specification Sheet

Heavy Duty Series

Lead Free, Full Port Brass Ball Valves, Female NPT x Female NPT

Feature:

- ✓ Dezincification Resistant (DZR) Lead Free Brass
- ✓ Thread conform to ANSI B1.20.1
- ✓ Forged Full Port Brass body
- ✓ Blow out proof stem design
- ✓ Packing nut, O-ring & packing on the stem seal
- ✓ Stainless Steel Ball
- ✓ Handle with vinyl grip
- ✓ Compatible with Water, Oil, Gas, Steam and Air applications

Pressure Rating:

- 600 psi (WOG/CWP) 150 psi (WSP)
- Temperature range: -20°F to 300°F

Approvals:

CSA
ANSI Z21.15/ CSA 9.1 (1/4”-4”)
ASME B16.44/ CR91-001 (1/4”-4”)
ASME B16.33/ CGA3.16 (1/2”-2”)
ASME B16.38/ CGA3.16 (2-1/2”-4”)

UL
UL 842/ UL 125 (1/4”-2”)

FM
FM1140 (1/4”-2”)

IAPMO
NSF/ANSI-61
NSFANSI-372
IGC-157

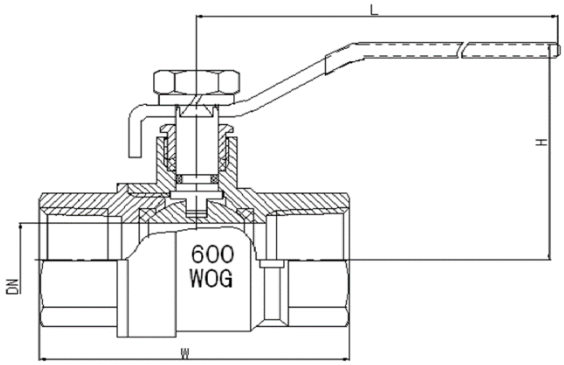

ISO9001:2015

Part Name	Material
Body	Lead Free Brass
Seat	PTFE
Ball	Stainless Steel
Stem O-ring	NBR
Packing Nut	Brass
Stem	Brass(1/4”-2”)
	SS304(2-1/2”-4”)
Lock Nut	Ferromagnetic Zinc plated
Lock Washer	Ferromagnetic Zinc plated
Packing	PTFE
Handle	Ferromagnetic Chrome plated
Cap	Lead Free Brass

Part#	Size	DN	L	H	W
5411LF	1/4”	0.394	3.46	1.68	1.73
5412LF	3/8”	0.394	3.46	1.68	1.73
5401LF	1/2”	0.591	3.46	1.81	2.24
5402LF	3/4”	0.748	4.29	2.09	2.52
5403LF	1”	0.984	4.29	2.25	2.97
5404LF	1-1/4”	1.259	5.63	2.52	3.44
5405LF	1-1/2”	1.574	5.63	2.74	3.88
5406LF	2”	1.949	5.63	3.03	4.29
5407LF	2-1/2”	2.52	7.76	4.25	5.53
5408LF	3”	2.894	8.19	4.58	6.14
5409LF	4”	3.839	9.25	5.49	7.79

***Unit in Inch**

Copperfit Industries Inc. 1280 E 9th St, Pomona, CA 91766 Phone: (909) 622-6100 Fax: 909-622-5566 .V20031